renatta

# Internet of Things Lora Wireless Solutions

- Low-altitude
- Energy
- Mining
- Agriculture

Inovation Quality Service

High Cost-Performance Ratio

Trusted Partner in IoT

renatta

# Consider it Done

Renatta is a leading company in the industrial automation sector, dedicated to delivering high-quality products and comprehensive solutions. Renatta is located in the ancient yet modern historical city of Xiamen City. Our offerings include industrial remote controllers, sensors, controllers, and IoT devices. With a strong commitment to independent research and technological innovation, Renatta has amassed 10 years of experience in industrial automation and the Internet of Things, proudly serving over 100 clients.

- Independent research and development innovation
- Scientific management system
- efficient and professional technical services

Leveraging our robust R&D and manufacturing expertise, we consistently deliver tailored products and solutions to our clients,encompassing industrial remote contrbllers, controllers, and IoT products and solutions.

## Innovation capability

We are dedicated to fostering continuous innovation, assisting our clients in overcoming challenges, delivering value, and facilitating their sustained growth.

## Team work

The company attracts top talent to form highly efficient teams. We collaborate closely with our clients to deliver exceptional value.

## Customization

Tailored products and solutions meet the most demanding

+86 172 6820 8207 sales@renatta-tech.com http://www.renatta-tech.com

# Continuous Improvement
# Customer Focus
# Collaboration
# Innovation

***Innovation*** ***Integrity***

***Collaboration*** ***Focus***

*"Focus Achieves Professionalism*

*Providing Customers with High-Quality*

*Products and Solutions"*

Renatta offers products in three categories: industrial automation, IoT, and solutions. We have advanced manufacturing capabilities and hold ISO 9001 certification, along with numerous software copyrights, invention patents, and utility model patents. Our products are extensively utilized in China, Europe, and North America. We address customer challenges and help them achieve value, earning their trust and commendation.

## Industry Automation

Specializing in industrial remote control and wireless transmission products and solutions, we provide a range of offerings including industrial remote controllers, remote control panels, wireless I/O devices, sensors, controllers, and more.

## IoT

Offers IoT I/O products and networks utilizing wireless communication technologies, including LoRa, LoRaWAN, Zigbee, 4G, and BLE.

## Solutions

Delivers integrated solutions for mechanical and electrical control systems, smart districts, smart agriculture, smart street lighting, and smart livestock management.

+86 172 6820 8207 sales@renatta-tech.com http://www.renatta-tech.com

# Gateway

| Model | RLGW01 | RLGW02 |
|---|---|---|
| Photo | | |
| Power | 10-30VDC | 10-30VDC |
| Wireless | LoRa | LoRa |
| IO | RS485/TCP iP | RS485 |
| Size(mm) | 86X82X25 | 86X82X25 |

# Nodes

| Model | RWPT802 | RWPT806 | RWPT822 | RWPT826 |
|---|---|---|---|---|
| Photo | | | | |
| Power | Battery | Battery | 10-30VDC | 10-30VDC |
| Wireless | LoRaWAN | LoRa | LoRaWAN | LoRa |
| IO | AI/DI | AI/DI | AI/DI/DO | AI/DI/DO |
| Size(mm) | 164X148X70 | 164X148X70 | 86X82X25 | 86X82X25 |

## Transparent transmission

The transparent transmission network system composed of RLGW01 can be used in RS485 networks, Modbus TCP networks, or hybrid networks, replacing the original wired network. With simple configuration, a wireless transparent transmission network can be established.

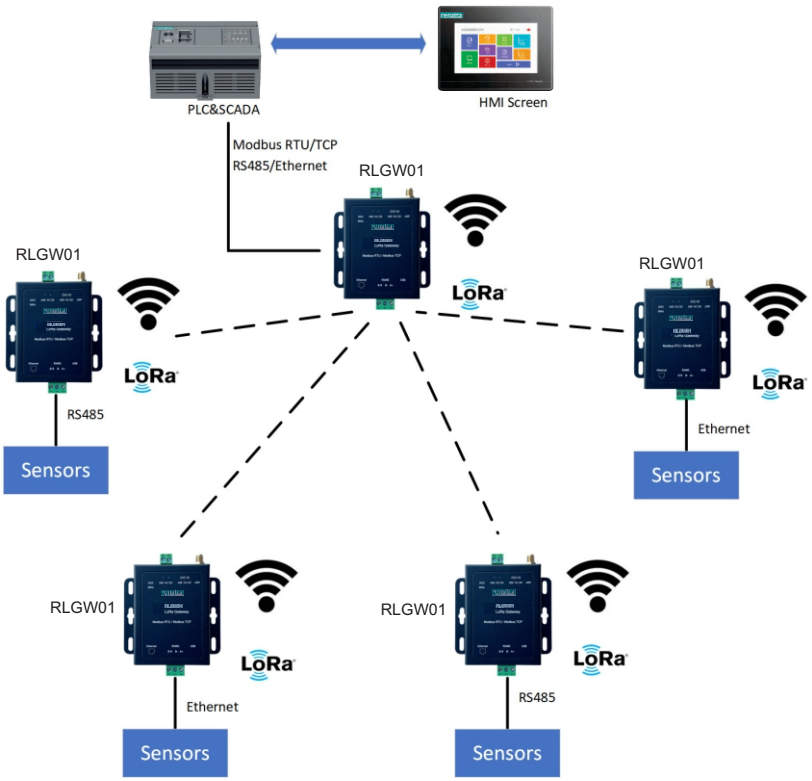


## Gateway

The Modbus RTU/TCP network system, centered on the RLGW01 gateway, enables the PLC to access the RLGW01 register table through Modbus. The RLGW01 gateway automatically gathers values from network nodes and updates the register table for the PLC to read. Nodes either send data to RLGW01 at regular intervals or trigger data transmission in response to status change events.

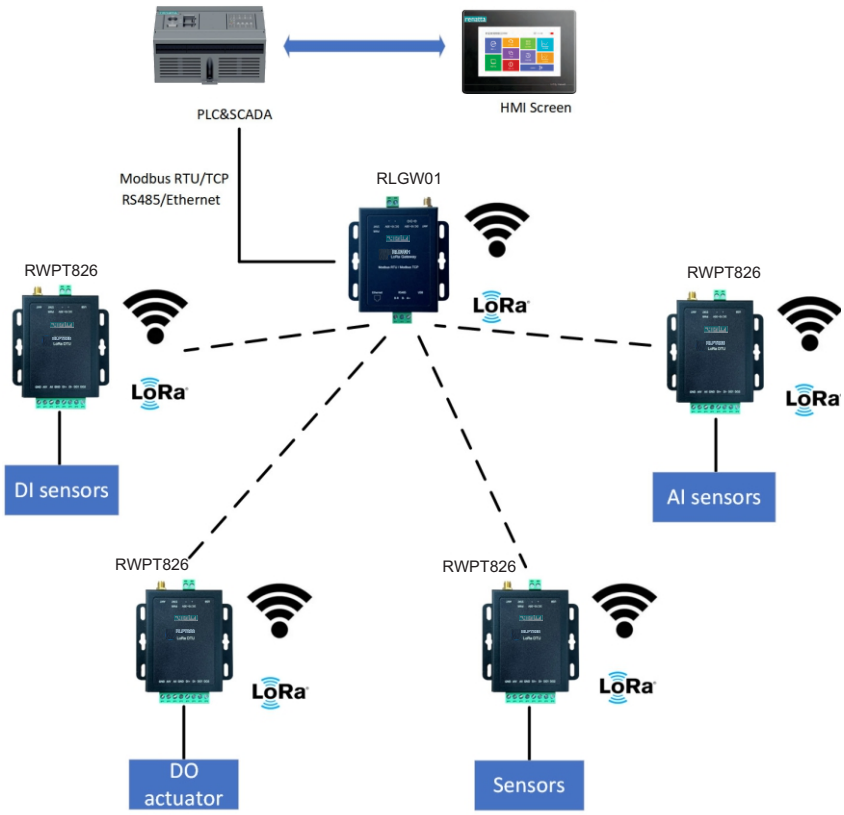

# IIOT Gateway

## RLGW01 LoRa Gateway

## Product introduction

The RLGW01 LoRa gateway is designed for use in wireless LoRa networks, receiving data from LoRa nodes and outputting it via an RS485 bus. The PLC/SCADA system can access this data through RS485 Modbus RTU. LoRa nodes actively report sensor data to the RLGW01 gateway at regular intervals. The gateway collects and stores this data in a register table, allowing sensor data retrieval by accessing the table. Additionally, the output value of a LoRa node can be controlled by writing to the gateway's register.

The RLGW01 LoRa gateway can also operate in transparent mode, connecting various serial devices or Modbus TCP devices. It replaces the original wired connections in the network with wireless connections without altering the original network configuration. Within the same network, the RLGW01 can connect to both RS485 serial devices and Modbus TCP devices, greatly facilitating user network deployment and connectivity.

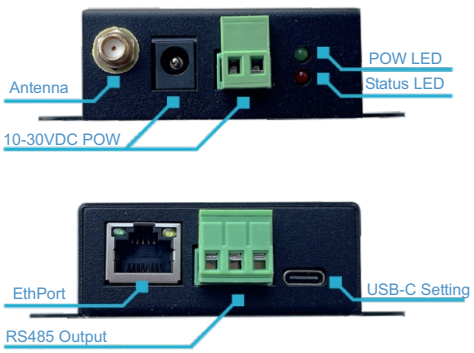


## RLGW01 LoRa Gateway

### Product Specification

- Power supply :10~30VDC
- Configurable channels
- USB-based parameter configuration
- USB-enabled MCU program upgrades
- Long-range and low power consumption
- Supports Modbus RTU/TCP protocol
- Support transparent mode
- AES128 encryption

Industrial Automation,Power Energy,Smart City, Smart Block,Smart Community, Smart Factory

INDUSTRIAL IOT



http://www.renatta-tech.com

TEL: +86 172 6820 8207

## Product Parameters

| Name | Content | Remark |
|---|---|---|
| Frequency bands | 433/470/868/915 | MHZ |
| Antenna | External rod antenna | Optional FRP antenna |
| Transmit power | 20dbm | |
| Power supply | 10-30VDC | |
| Power adapter | Input 100~240VAC 50/60HZ | |
| | Output 12VDC/1A | |
| Maximum current | <300mA | AVG. 120mA@12VDC |
| | | AVG. 60mA@24VDC |
| Operating temperature | (-40～+85)℃ | |
| Transmission distance | 1-10KM | Sunny weather, visual barrier-free up to 10KM |
| Protection | IP65 | |
| Weight | Approx. 200g | Power adapter not included |
| Housing material | Galvanized steel | |
| Size | 86X82X25 | mm |

## Product Size

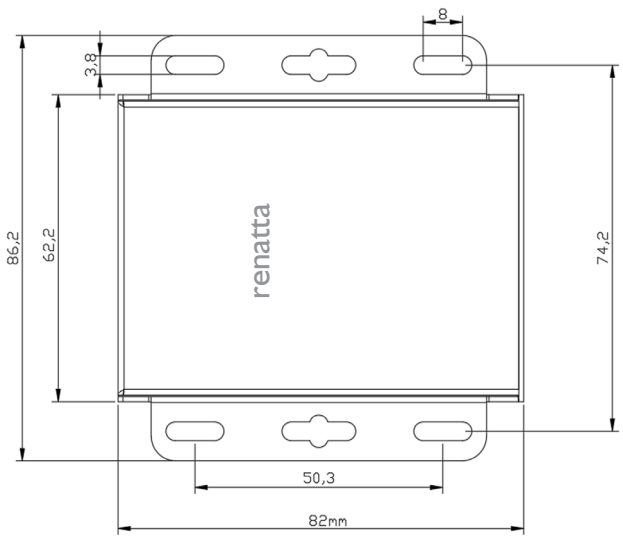


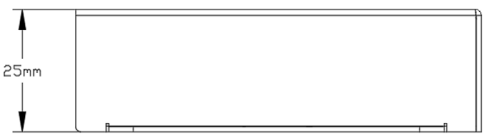

# IIOT Gateway

## RLGW02 LoRa Gateway

## Product introduction

The RLGW02 LoRa gateway is designed for use in wireless LoRa networks, receiving data from LoRa nodes and outputting it via an RS485 bus. The PLC/SCADA system can access this data through RS485 Modbus RTU. LoRa nodes actively report sensor data to the RLGW02 gateway at regular intervals. The gateway collects and stores this data in a register table, allowing sensor data retrieval by accessing the table. Additionally, the output value of a LoRa node can be controlled by writing to the gateway's register.

The RLGW02 LoRa gateway can also operate in transparent mode, connecting various serial devices . It replaces the original wired connections in the network with wireless connections without altering the original network configuration.

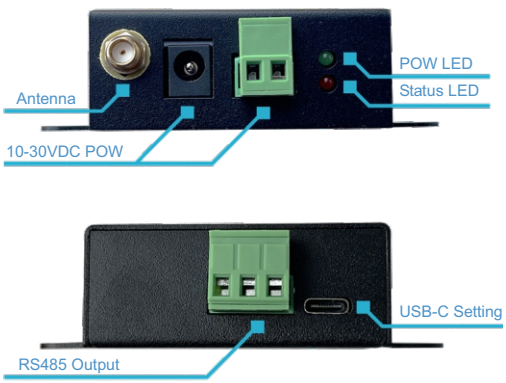


## RLGW02 LoRa Gateway

### Product Specification

- Power supply :10~30VDC
- Configurable channels
- USB-based parameter configuration
- USB-enabled MCU program upgrades
- Long-range and low power consumption
- Supports Modbus RTU/TCP protocol
- Support transparent mode
- AES128 encryption

Industrial Automation,Power Energy,Smart City,
Smart Block,Smart Community, Smart Factory

INDUSTRIAL IOT



http://www.renatta-tech.com

TEL: +86 172 6820 8207

## Product Parameters

| Name | Content | Remark |
|---|---|---|
| Frequency bands | 433/470/868/915 | MHZ |
| Antenna | External rod antenna | Optional FRP antenna |
| Transmit power | 20dbm | |
| Power supply | 10-30VDC | |
| Power adapter | Input 100~240VAC 50/60HZ | |
| | Output 12VDC/1A | |
| Maximum current | <300mA | AVG. 120mA@12VDC |
| | | AVG. 60mA@24VDC |
| Operating temperature | (-40～+85)℃ | |
| Transmission distance | 1-10KM | Sunny weather, visual barrier-free up to 10KM |
| Protection | IP65 | |
| Weight | Approx. 200g | Power adapter not included |
| Housing material | Galvanized steel | |
| Size | 86X82X25 | mm |

## Product Size

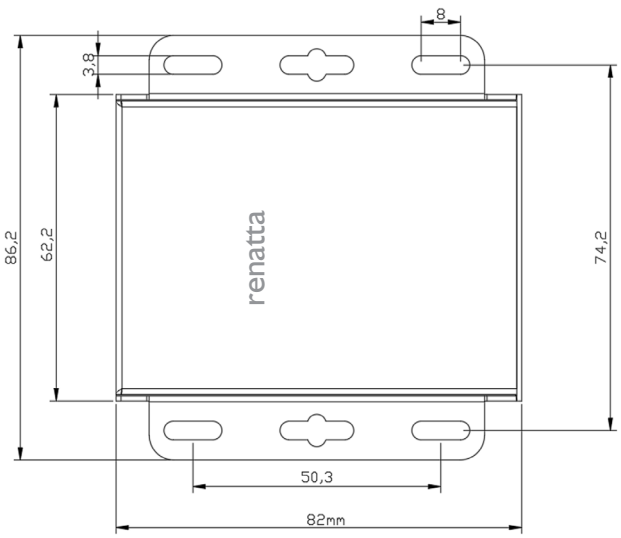

# IIOT LoRaWAN DTU

## RWPT802 Battery Powered

## Product introduction

RWPT802 LoRaWAN® wireless DTU monitors AI signals in field. It reports signal value to cloud platform at a configurable time interval and sends alarm message to platform when signal passes beyond alarm threshold or there is a variation of signal. The data is sent with LoRaWAN® communication technology which features long-distance communication and low power consumption.

The device can be configured with PC setting tool via on board TTY serial port. User can configure alarm threshold, network access method OTAA/ABP, network access parameters and etc.

With the corresponding gateway, the device can be connected to all kinds of network servers and IOT platforms such as TTN, AWS and etc.

The battery-powered wireless DTU features a low-power design and has the characteristics of long communication distance, long battery life, high measuring accuracy, no wiring, and is widely used on AI signal monitor occasions.

## RWPT802 LoRaWAN

### Product Specification

- Lithium thionyl chloride battery(19AH) powered
- LoRaWAN compatible
- Class A/Class C device supported
- Heartbeat report and event drive report
- Supports configuration from cloud platform
- Supports configuration by serial port
- Supports integration with TTN platform

Industrial Automation,Power Energy,Smart City, Smart Block,Smart Community, Smart Factory

INDUSTRIAL IOT



http://www.renatta-tech.com

TEL: +86 172 6820 8207

## Product Parameters

| Name | Parameters | Remarks |
|---|---|---|
| Frequency | EU868/US915/CN779/EU433/AU915/CN470/AS923/KR920/IN865 | |
| Access Network Mode | OTAA/ABP | |
| Antenna | External antenna | |
| Supported Platform | TTN | |
| TX Power | 20dbm | |
| Battery | ER34615 | 19000mAh(Non-rechargeable) |
| Battery lifespan | 3~5 years | Related with sample period and reporting period |
| Max current | ＜200mA | |
| Protection | IP66 | |
| Sampling time | Default 5min | Configurable |
| Working temperature | (-20～+85)℃ | |
| Size | 164X148X70 | mm |

## Product Size

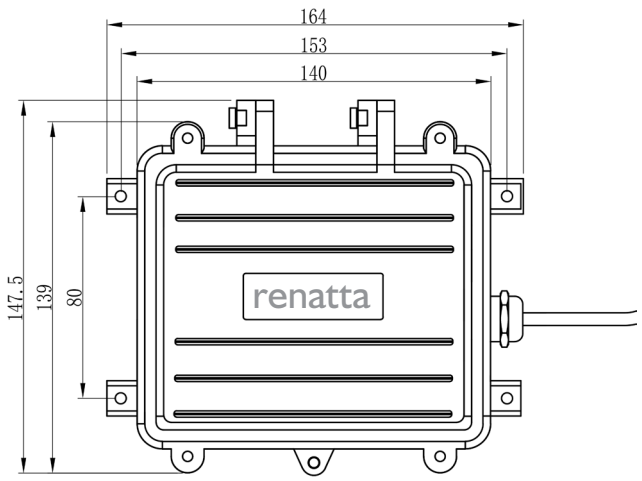


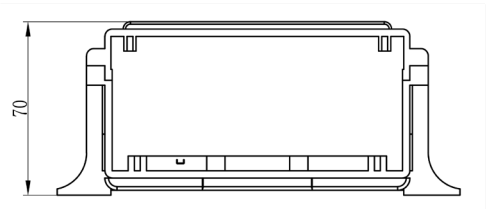

# IIOT LoRa DTU

## RWPT806 Battery Powered

## Product introduction

The RWPT806 LoRa DTUs are designed to monitor AI/DI signals efficiently. These DTUs periodically transmit AI/DI data to the gateway according to a set reporting interval. Additionally, they send alerts to the gateway when AI signals exceed
the upper alarm limit, fall below the lower alarm limit, or change beyond a specified threshold. Utilizing LoRa wireless communication technology, the DTUs offer long-range and low-power data transmission. The data is sent to a wireless gateway equipped with an RS485 Modbus RTU output. The DTUs are powered by ER34615 lithium thionyl chloride batteries, ensuring reliable operation.

## RWPT806 LoRa DTU

### Product Specification

- Lithium thionyl chloride battery(19AH) powered
- LoRa compatible
- Heartbeat report and event driven report
- Supports configuration from cloud platform
- Supports configuration by serial port

Industrial Automation,Power Energy,Smart City,
Smart Block,Smart Community, Smart Factory

INDUSTRIAL IOT

## Product Parameters

| Name | Parameters | Remarks |
|---|---|---|
| Frequency | 915/868/433/470MHZ | |
| Antenna | External antenna | |
| TX Power | 20dbm | |
| Battery | ER34615 | 19000mAh(Non-rechargeable) |
| Battery lifespan | 3~5 years | Related with sample period and reporting period |
| Max current | ＜200mA | |
| Protection | IP66 | |
| Sampling time | Default 5min | Configurable |
| Working temperature | (-20～+85)℃ | |
| Size | 164X148X70 | mm |

## Product Size

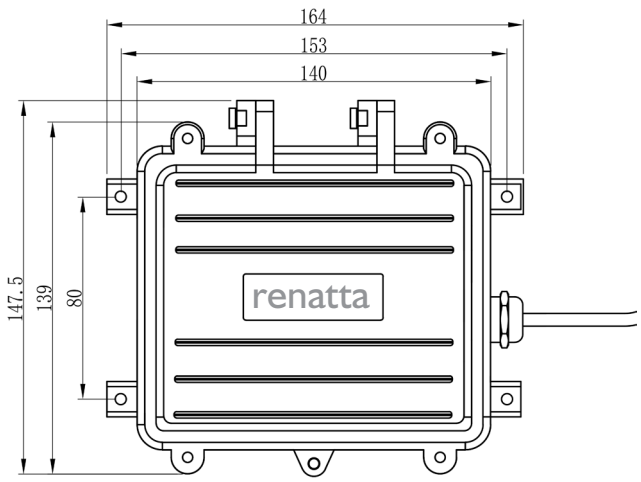


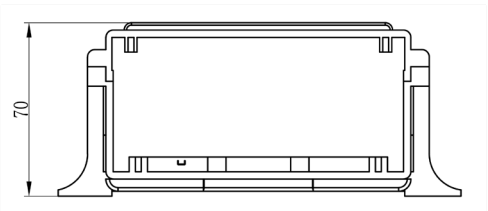

# IIOT LoRaWAN DTU

## RWPT822 AI/DI/DO

## Product introduction

The RWPT822 LoRaWAN DTUs are optimized for the e翻 cient monitoring of AI/DI signals and outputting DO signal. Each DTU is equipped with one AI input (for current or voltage), one DI input, and two DO outputs. These devices periodically transmit AI/DI data to the gateway according to a predefined reporting interval. Additionally, they send alerts when AI signals exceed upper alarm limits, fall below lower limits, or change beyond a specified threshold. The data is sent with LoRaWAN® communication technology which features long-distance

The device can be configured with PC setting tool via USB type C port. User can configure alarm threshold, network access method OTAA/ABP, network access parameters and etc.

With the corresponding gateway, the device can be connected to all kinds of network servers and IOT platforms such as TTN, AWS and etc.

The DTU features a low-power design and has the characteristics of long communication distance, long battery life, high measuring accuracy, no wiring, and is widely used on IO signal M&C occasions.

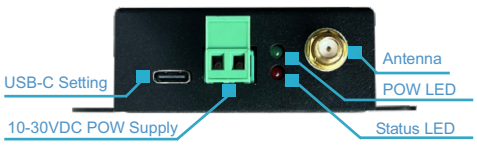


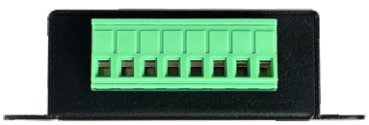


## RWPT822 LoRaWAN

### Product Specification

- 10-30VDC powered
- LoRaWAN compatible
- Class A/Class C device supported
- Heartbeat report and event driven report
- Support AI/DI/DO signal
- Supports configuration from cloud platform
- Supports configuration by serial port
- Supports integration with TTN platform

Industrial Automation,Power Energy,Smart City,
Smart Block,Smart Community, Smart Factory

## Product Parameters

| Name | Content | Remark |
|---|---|---|
| Band plans | EU868/US915/CN779/EU433/AU915/CN470/AS923/KR920/IN865 | |
| Access Network Mode | OTAA/ABP | |
| Antenna | External rod antenna | Magnetic mount antenna optional |
| Transmit power | 20dbm | |
| Transmission distance | 1-10KM | Sunny weather, visual barrier-free up to 10KM |
| Power supply | 10-30VDC | |
| Maximum current | <200mA | |
| Configuration port | USB type C | |
| Operating temperature | (-40 ~ +85)℃ | |
| Protection | IP65 | |
| Weight | Approx. 200g | |
| Housing material | Galvanized steel | |
| AI signal | AII:4-20mA | AII and AIV signals can only be connected one at a time. |
| | AIV:0-5VDC | |
| DI signal | 12-24VDC | The DI signal is an opto-isolated input. |
| DO signal | Power positive rail | The DO output is a high-side power output |
| Size | 86X82X25 | mm |

## Product Size

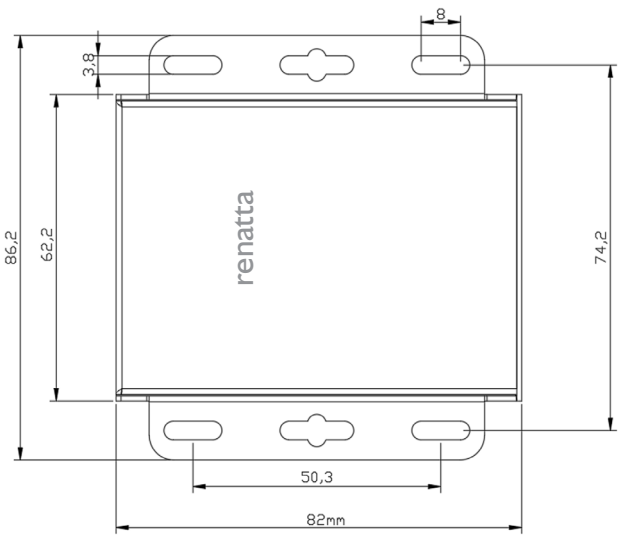

# IIOT LoRa DTU

## RWPT826 AI/DI/DO

## Product introduction

The RWPT826 LoRa DTUs are optimized for the efficient monitoring of AI/DI signals and outputting DO signal. Each DTU is equipped with one AI input (for current or voltage), one DI input, and two DO outputs. These devices periodically transmit AI/DI data to the gateway according to a predefined reporting interval. Additionally, they send alerts when AI signals exceed upper alarm limits, fall below lower limits, or change beyond a specified threshold. Users can set/reset the DO output via the gateway's Modbus register.

Leveraging LoRa wireless communication technology, the DTUs provide long-range, low-power data transmission. Data is sent to a wireless gateway with an RS485 Modbus RTU output. The DTUs operate on a 10-30VDC power supply. Additionally, the AI/DI/DO channels can be customized to meet specific requirements.

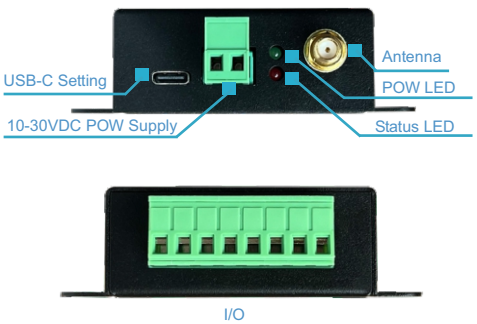


## RWPT826 LoRa DTU

### Product Specification

- 10-30VDC power
- LoRa compatible
- Heartbeat report and event driven report
- Support AI/DI/DO signals
- Support USB configuration
- Low power consumption, long distance

Industrial Automation,Power Energy,Smart City,
Smart Block,Smart Community, Smart Factory

## Product Parameters

| Name | Content | Remark |
|---|---|---|
| Frequency bands | 433/470/868/915 | MHZ |
| Antenna | External rod antenna | Magnetic mount antenna optional |
| Transmit power | 20dbm | |
| Transmission distance | 1-10KM | Sunny weather, visual barrier-free up to 10KM |
| Power supply | 10-30VDC | |
| Maximum current | <200mA | |
| Configuration port | USB type C | |
| Operating temperature | (-40 ~ +85)℃ | |
| Protection | IP65 | |
| Weight | Approx. 200g | |
| Housing material | Galvanized steel | |
| AI signal | AII:4-20mA | AII and AIV signals can only be connected one at a time. |
| | AIV:0-5VDC | |
| DI signal | 12-24VDC | The DI signal is an opto-isolated input. |
| DO signal | Power positive rail | The DO output is a high-side power output |
| Size | 86X82X25 | mm |

## Product Size

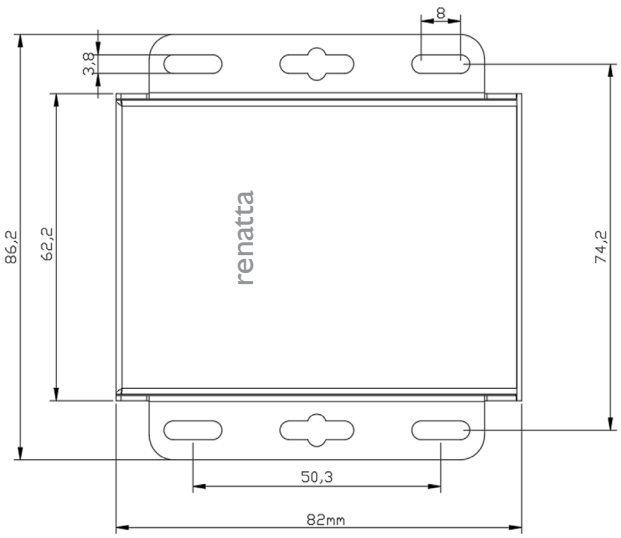

## Typical scenario applications

### Modbus RTU/TCP Gateway Network

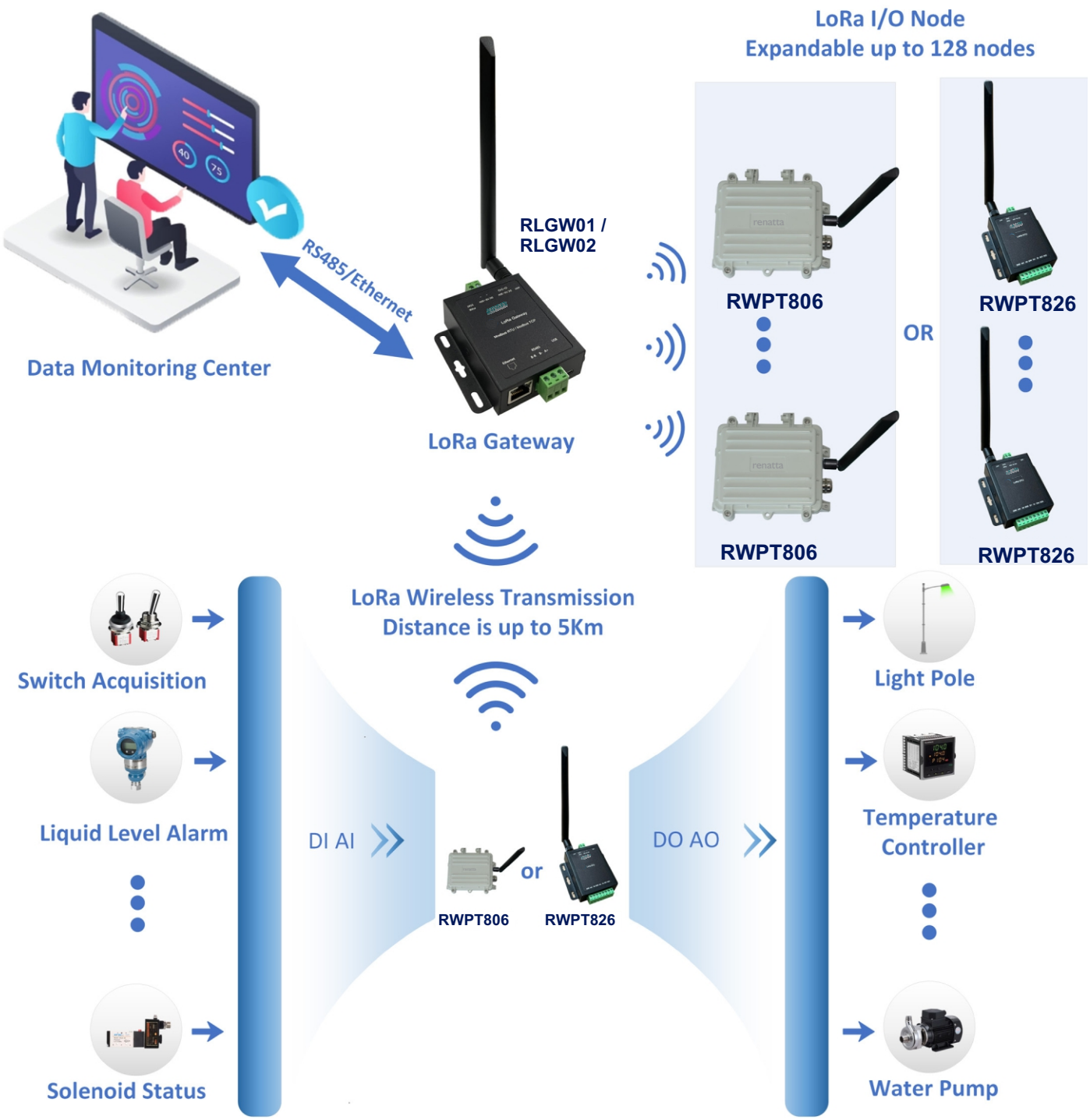

## Typical scenario applications

### Modbus RTU/TCP Wireless Data Transparent Transmission Network

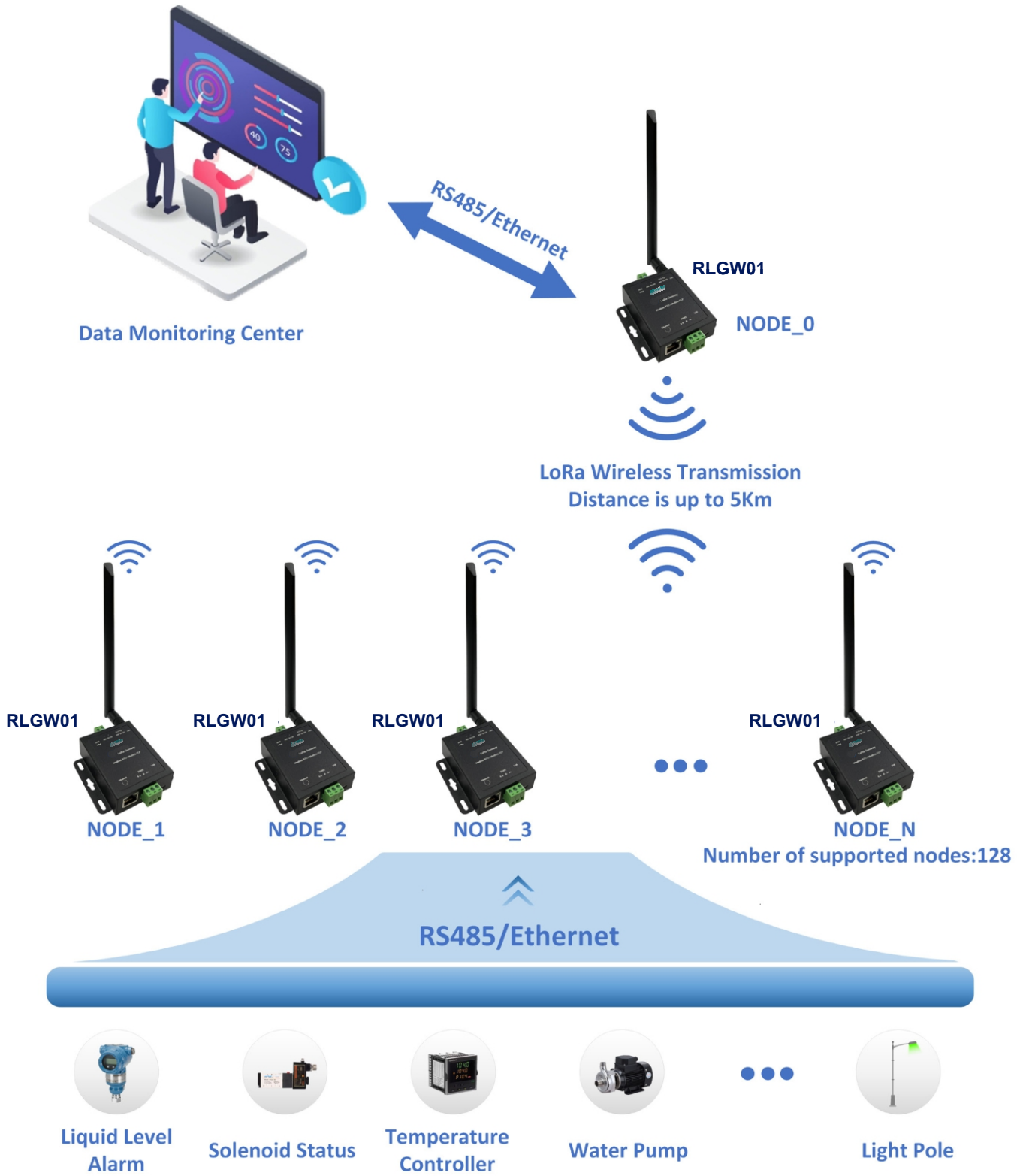

## Typical scenario applications

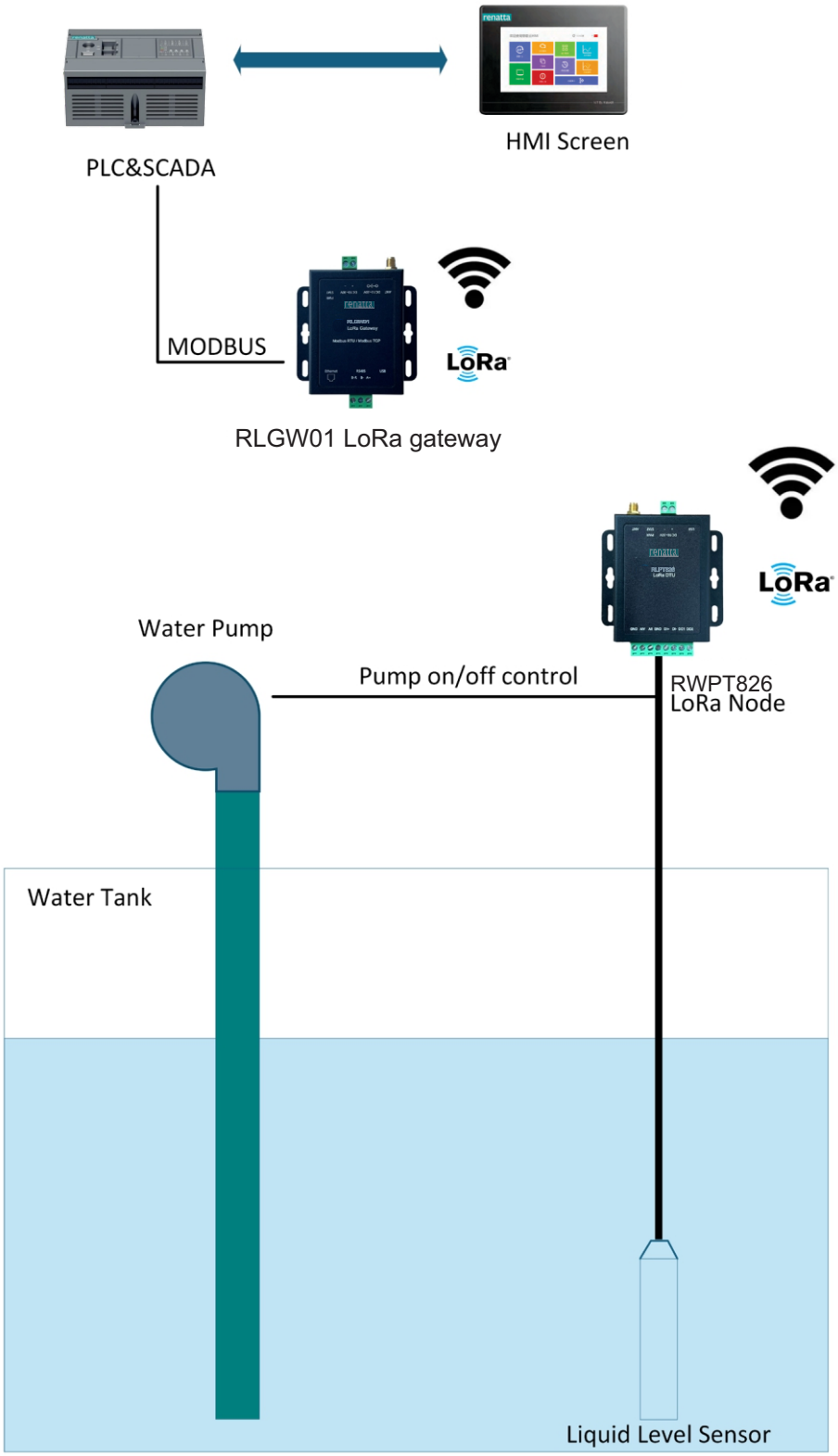


Wireless Water Tank Level Control Solution
With RWPT826

## Typical scenario applications

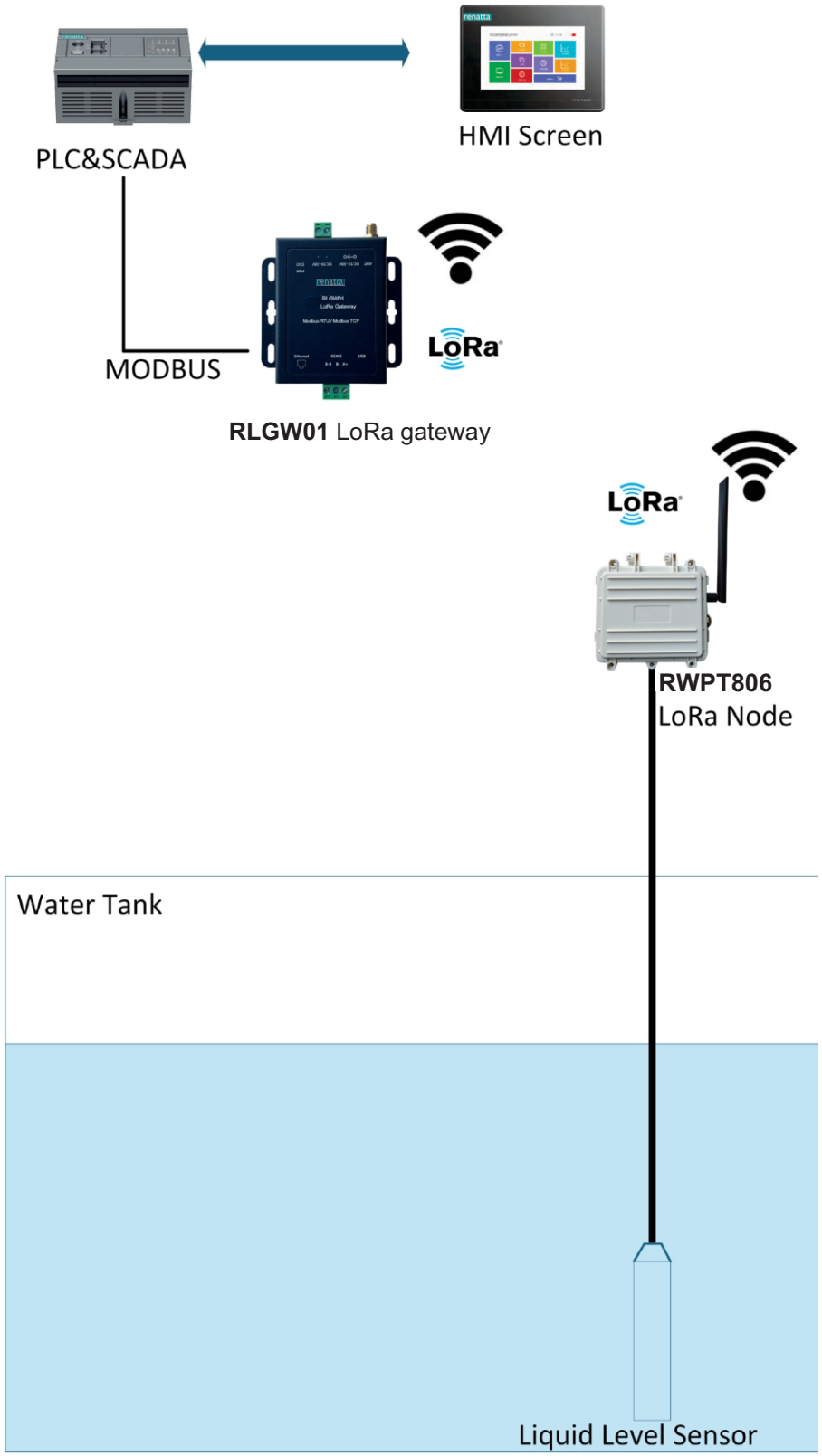


Wireless Water Tank Level Control Solution
With RWPT806

Dedicated to becoming a globally recognized automation brand.

renatta

TEL: +86 172 6820 8207

http://www.renatta-tech.com

No. 5-101, Dongkeng Zhongli, Fengxiang Street,
Xiangan District, Xiamen, Fujian, China